PART NUMBER	DESCRIPTION	QTY.
CUP	CUP	1
BASE	BASE	1
M6 x 1 x 12 MM BHSCS	M6 BUTTON HEAD SOCKET SCREW	1

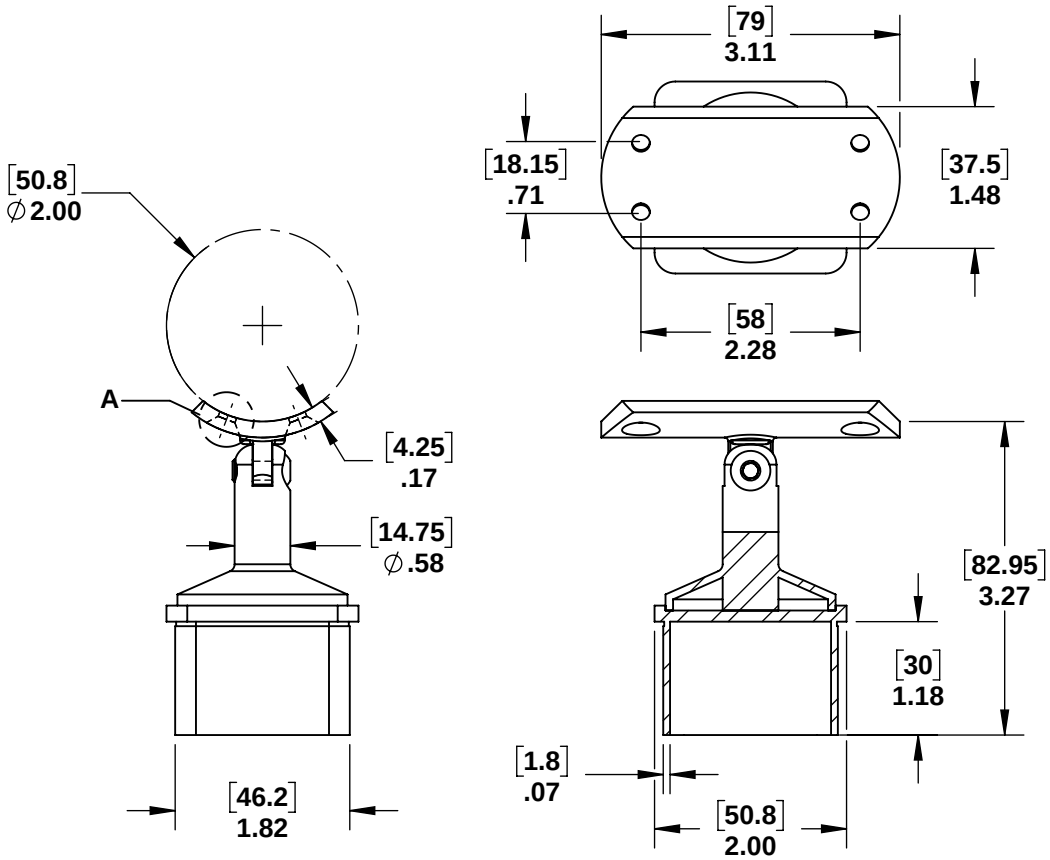

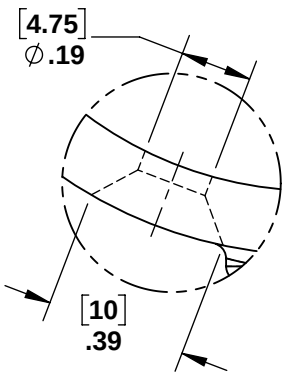

DETAIL A
SCALE 2 : 1

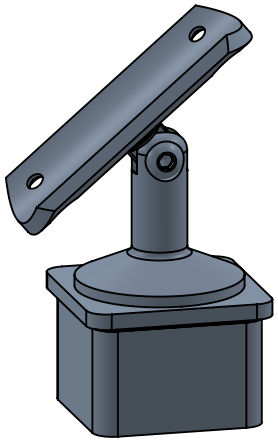

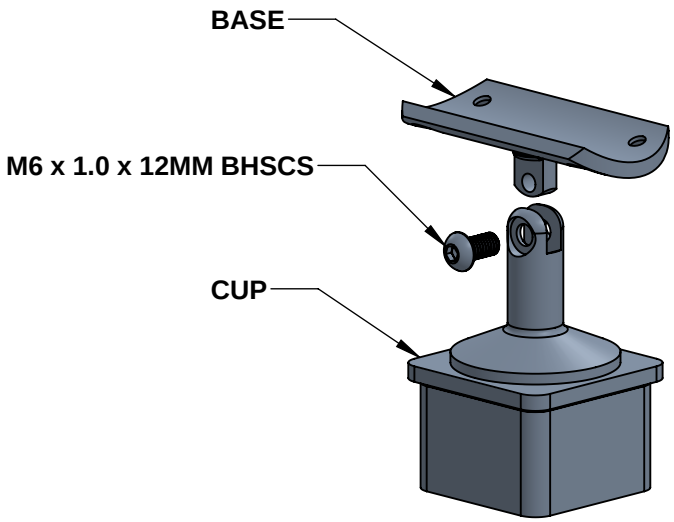

SC&R Stainless Cable & Railing

PROPRIETARY AND CONFIDENTIAL

THE INFORMATION CONTAINED IN THIS DRAWING IS THE SOLE PROPERTY OF STAINLESS CABLE AND RAILINGE. ANY REPRODUCTION IN PART OR AS A WHOLE WITHOUT THE WRITTEN PERMISSION OF STAINLESS CABLE AND RAILINGE IS PROHIBITED.

NOTES: UNLESS OTHERWISE SPECIFIED

1. DIMENSIONS SHOWN - INCHES [MM].
2. MACHINED SURFACES TO BE 63uIN MAX.
3. PART TO BE FREE OF BURRS AND SHARP EDGES.
4. ALL MATERIAL TO BE CLEAN, DEGREASED AND FREE OF ALL IMPURITIES.
5. ANY CHANGE MUST BE AUTHORIZED BY AN SC&R ENGINEER.

DIMENSIONS ARE IN INCHES
FRACTIONAL ±
ANGULAR: MACH ±
TWO PLACE DECIMAL ±
THREE PLACE DECIMAL ±

MATERIAL: 316 SS

FINISH:

	NAME	DATE
DRAWN	SCR	10/31/18
ENG APPR.		
MFG APPR.		

COMMENTS:

TITLE:

STAINLESS SQUARE ADJUSTABLE RADIUS INTERMEDIATE POST CAP

SIZE	DWG. NO.	REV
A	731311	01

SCALE: 1:2 | WEIGHT: | SHEET 1 OF 1